ROCKY MOUNTAIN OILFIELD TESTING CENTER

PROJECT TEST RESULTS

TANK LEVEL GAUGING SYSTEM

JULY 25, 1996

FC9519 / 95PT7

ROCKY MOUNTAIN OILFIELD TESTING CENTER

TANK LEVEL GAUGING SYSTEM

DOUBLE M ELECTRIC

Prepared for:

Industry Publication

Prepared by:

MICHAEL R. TYLER
RMOTC Field Engineer

July 25, 1996

551103/9519:jb

ABSTRACT

The Rocky Mountain Oilfield Testing Center (RMOTC) conducted a test of a Tank Level Gauging System at the Naval Petroleum Reserve No. 3 (NPR-3). Double M. Electric manufactures the equipment that incorporates an optical-encoder sending unit, cellular communications, and software interface. The system effectively displayed its capabilities for remote monitoring and recording of tank levels.

MJT

CONTENTS

Page

Introduction 1

Figure 1 2

Procedure.....3

Testing Details 3

Observations 4

Conclusions.....4

Acknowledgments 5

Tables 6-10

ROCKY MOUNTAIN OILFIELD TESTING CENTER

TANK LEVEL GAUGING SYSTEM

July 25, 1996

INTRODUCTION:

The Rocky Mountain Oilfield Testing Center (RMOTC) conducted a field test on the Double M Electric Tank Level Gauging System at the Naval Petroleum Reserve No. 3 (NPR-3), located 35 miles north of Casper, Wyoming.

Manual tank gauging and reporting are time-honored practices in oilfield operations. Manual measurement of stored fluids is a labor intensive and relatively primitive method of obtaining field tankage readings; however, for most operations it has been the only feasible means of determining production status.

Facility automation has proven to be a cost-effective, reliable method of monitoring and managing production facilities. The Double M Electric system for Tank Level Gauging was developed to increase the accuracy of tank gauging and to minimize on-site labor requirements through a cellular link. The system's reduced exposure of personnel to slippery ladders and tanks also enhances operation safety.

The Double M system incorporates a mechanical float assembly that is mechanically coupled to an optical encoder, located in a tank-top-mounted sending unit. Two different Class 1, Division 1, Group D sending units were tested (see Figure 1, page 2): a conventional stainless steel housing and a modified aluminum housing which requires considerably less manufacturing time. The 4-to-20 mA output is hard wired to a controller that utilizes a cellular-phone interface. Telecommunication software packages (developed by Titan Technologies) can interrogate the controller, as required, to acquire auto-dialed point-in-time data or to display real-time measurements.

FIGURE 1: TANK LEVEL GAUGING SYSTEM

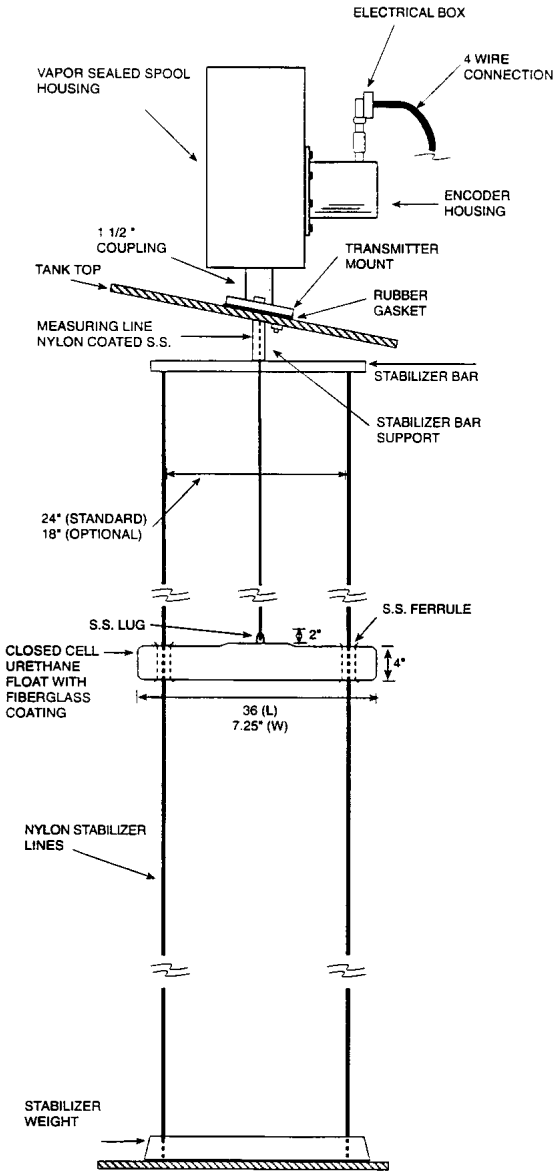

PROCEDURE:

A mechanical float assembly was installed in a 300-bbl production tank at well 63-StX-29, with an optical-electrical link to a cellular-phone interface. Associated personnel-computer software was used to remotely monitor operations, incorporating both automated dialing/recording and graphical display of data.

Installation of the float assembly was simple and required five holes (1/4"-3/8") to be air-drilled in the tank top. The float assembly was installed through the thief hatch, and it was lowered in by the float-guide/stabilizer wires, that were constructed from 1/4" nylon rope.

Measurement procedures involved shutting the well in, performing a manual tank gauge, and manually recording the site-controller readout. The "Autodial" software automatically and remotely queried the controller and recorded tank levels, during the same period.

TESTING DETAILS:

The test was designed to demonstrate the accuracy and reliability of the tank gauging system and the minimization of its on-site labor requirements, based on the four following criteria:

Accurate gauging of the tank to within 1% of the manual tank gauge: Excluding days with questionable or no data, the average absolute percent difference in gauges over the 5-month test was .3% from the manual tank gauges, with only five readings exceeding the 1 % criteria (the highest of which was 2.1 %). See Tables, pages 6-10.

Cellular communication between the controller and the PC-based program: The system can use either of two user-friendly software packages and communicates through a modem/cellular-phone interface. The system functioned effectively with the "Autodial" program, which enabled data monitoring and recording. The "Autodial" software provides for automated data acquisition from eight sources by dialing the site and recording/printing data, for preselected intervals. The "Level 15" software graphically displays a total of eight real-time tank (or meter) parameters, but does not provide data recording.

Reliable operation of equipment: Simple mechanical design of the float assembly facilitated its reliable operation. The system maintained its calibration even when the fluid dropped below the system's lowest monitoring level. Both the stainless-steel "TPZ 3310" sending unit and the aluminum counterpart functioned efficiently.

Control capability using high and low level alarms: The system consistently annunciated both high and low level alarms at user-selected setting.

OBSERVATIONS:

The tank gauge could not be read below approximately 8" from the bottom of the tank (the height of the concrete stabilizer weight). However, system calibration was maintained after the tank was drained and the float again picked up off the stabilizer weight.

The cellular phone that was installed in the controller was a typical .6-Watt hand-held unit. Problems were experienced with the original omni-directional antenna due to the "sheltered" location of the site, but installation of a directional YAGI antenna resolved the transmission problems. Cellular phone calls were periodically difficult to connect, due to heavy phone traffic.

The system was tested during warm months (April 4 through August 31, 1995) and was not exposed to severe cold weather, so freeze-up conditions were not encountered.

The test site experienced power bumps throughout the summer, but modem initialization and recalibration were easily accomplished through the "GLM" controller.

The "Level 15" program was developed to specifically function with a 1,200-baud modem. Personal computers incorporating high-speed modems may experience compatibility problems.

The manufacturer reports that the system is being used to control activities (e.g., turning on/off pumps) at other sites.

CONCLUSIONS:

Testing of the system demonstrated that it is a reliable method of remotely monitoring tank level gauges. Accurate data was remotely collected, on demand, without the necessity of manual tank gauging.

Several potential benefits of the system are:

- The accuracy of the system is much greater than manual gauging.
- The automated system minimizes on-site labor for routine monitoring functions. The system provides a viable option for production facility automation, including remote controlling of site equipment.
- The reduced exposure of personnel to slippery ladders and tanks enhances operation safety.

ACKNOWLEDGEMENTS:

This report was prepared by the Rocky Mountain Oilfield Testing Center (RMOTC) based on field testing conducted at the Naval Petroleum Reserve No. 3 (NPR-3), located 35 miles north of Casper in Natrona County, Wyoming, in cooperation with the U.S. Department of Energy. Testing was funded jointly by Double M Electric of Watford City, ND and RMOTC.

RMOTC is operated by Fluor Daniel (NPOSR), Inc., the Management and Operating Contractor for the DOE Naval Petroleum Oil Shale Reserves in Colorado, Utah and Wyoming. Work was directed by RMOTC Project Manager, Michael J. Taylor, and supported by Pumper A's, Dorothy Nickerson and Kermit Greene.

RMOTC's goal is to partner with the oil and gas industry to improve productivity by field testing new petroleum technology, evaluating new equipment and techniques, disseminating information to industry, and conducting training. For information contact RMOTC, 907 North Poplar, Suite 100, Casper, Wyoming 82601; phone 307-261-5000, ext. 5060.

For information about the Tank Level Gauging System, contact Neil D. Markuson; Double M Electric, P.O. Box 1566, Watford City, ND 58854; phone (800) 323-6106 / fax (701) 842-4132 or John Grimes; Titan Technologies, 14518-115 Avenue, Edmonton, Alberta, Canada T5M3B9; phone (403) 447-2171.

RMOTC TANK LEVEL GAUGING SYSTEM PROJECT DATA SHEET

63-STX-29	TIME	MANUAL	SITE	ABSOLUTE	COMPUTER	ALARM	PUMPER / TESTER	COMMENTS
300 BBL		GAUGE	READOUT	PERCENT	READOUT			High alarm set > = 160 bbl
TANK		(BBL)	(BBL)	DIFFERENCE	(BBL)			Low alarm set < = 60 bbl
4/1/95	n/a	n/a	n/a		n/a	n/a	n/a	Equipment not installed
4/2/95	n/a	n/a	n/a		n/a	n/a	n/a	Equipment not installed
4/3/95	n/a	n/a	n/a		n/a	n/a	n/a	Equipment not installed
4/4/95	16:00	25.60	25.600		n/a	low	Meidinger	Calibrate 16:00 (Markuson)
4/5/95	8:20	69.19	68.896		n/a	no	Meidinger	Antenna inoperative
4/6/95	n/a	n/a	n/a		n/a	n/a	n/a	Controller inoperative
4/7/95	n/a	n/a	n/a		n/a	n/a	n/a	Controller inoperative
4/8/95	n/a	n/a	n/a		n/a	n/a	n/a	Controller inoperative
4/9/95	n/a	n/a	n/a		n/a	n/a	n/a	Controller inoperative
4/10/95	n/a	n/a	n/a		n/a	n/a	n/a	Controller inoperative
4/11/95	n/a	n/a	n/a		n/a	n/a	n/a	Controller inoperative
4/12/95	n/a	n/a	n/a		n/a	n/a	n/a	Controller inoperative
4/13/95	n/a	n/a	n/a		n/a	n/a	n/a	Controller inoperative
4/14/95	n/a	n/a	n/a		n/a	n/a	n/a	Controller inoperative
4/15/95	n/a	n/a	n/a		n/a	n/a	n/a	Controller inoperative
4/16/95	n/a	n/a	n/a		n/a	n/a	n/a	Controller inoperative
4/17/95	13:20	191.70	191.700		193.658 @ 14:14	high	Nickerson	Calibrate 13:20 (Markuson)
4/18/95	n/a	n/a	n/a		106.410 @ 01:52	n/a	n/a	No reading
4/19/95	8:30	67.70	49.650		74.266 @ 12:21	low	Greene	Out of calibration
4/20/95	8:30	86.68	105.098		106.410 @ 09:00	no	Greene	Out of calibration
4/21/95	8:00	123.34	142.490		148.394 @ 12:00	no	Greene	Out of calibration
4/22/95	8:00	160.00	179.226		179.226 @ 08:00	high	Nickerson	Out of calibration
4/23/95	8:00	196.70	216.618		216.618 @ 08:00	high	Nickerson	Out of calibration
4/24/95	8:00	233.36	253.354		253.354 @ 08:00	high	Nickerson	Calibrate 15:47 (Taylor)
4/25/95	8:00	84.60	83.954	0.8%	82.642 @ 07:09	no	Nickerson	
4/26/95	8:00	120.00	120.690	0.6%	120.690 @ 08:00	no	Greene	
4/27/95	8:00	156.70	157.426	0.5%	156.770 @ 08:00	no	Greene	
4/28/95	8:00	193.36	194.162	0.4%	193.506 @ 08:00	high	Greene	
4/29/95	8:00	230.02	230.242	0.1%	n/a	high	Greene	NPR-3 Computer inoperative
4/30/95	8:00	71.69	71.490	0.3%	n/a	no	Nickerson	NPR-3 Computer inoperative
Average Absolute % Difference				0.4%				

RMOTC TANK LEVEL GAUGING SYSTEM PROJECT DATA SHEET

63-STX-29	TIME	MANUAL	SITE	ABSOLUTE	COMPUTER	ALARM	PUMPER / TESTER	COMMENTS
300 BBL		GAUGE	READOUT	PERCENT	READOUT			High alarm set >= 160 bbl
TANK		(BBL)	(BBL)	DIFFERENCE	(BBL)			Low alarm set <= 60 bbl
5/1/95	8:00	108.35	107.570	0.7%	107.570 @ 08:00	no	Nickerson	
5/2/95	8:00	145.01	143.650	0.9%	143.650 @ 08:00	no	Nickerson	
5/3/95	8:00	180.00	179.730	0.2%	179.730@ 08:02	high	Greene	
5/4/95	8:00	216.70	216.466	0.1%	215.154 @ 08:00	high	Greene	
5/5/95	n/a	n/a	n/a		n/a	n/a	n/a	No reading
5/6/95	n/a	n/a	n/a		n/a	n/a	n/a	No reading
5/7/95	n/a	n/a	n/a		n/a	n/a	n/a	No reading
5/8/95	n/a	n/a	n/a		n/a	n/a	n/a	No reading
5/9/95	8:00	173.36	172.514	0.5%	n/a	high	Greene	Modem inoperative
5/10/95	8:00	206.68	207.282	0.3%	n/a	high	Greene	Modem inoperative
5/11/95	8:00	241.67	242.050	0.2%	n/a	high	Greene	Modem initialized 08:30
5/12/95	8:20	115.03	114.786	0.2%	114.786 @ 08:06	no	Greene	
5/13/95	8:55	150.02	150.210	0.1%	154.146 @ 11:42	no	Greene	
5/14/95	8:00	183.34	183.010	0.2%	184.978 @ 09:19	high	Nickerson	
5/15/95	8:00	217.54	217.122	0.2%	216.466 @ 07:22	high	Nickerson	
5/16/95	n/a	n/a	n/a		252.546 @ 08:00	n/a	n/a	No reading
5/17/95	8:20	98.37	98.386	0.0%	98.386 @ 08:19	no	Greene	
5/18/95	8:01	131.69	132.498	0.6%	139.058 @ 12:37	no	Greene	
5/19/95	8:24	166.68	167.922	0.7%	177.762 @ 15:25	high	Greene	
5/20/95	8:20	201.67	201.378	0.1%	204.002 @ 09:55	high	Greene	
5/21/95	n/a	n/a	n/a		n/a	n/a	n/a	No reading
5/22/95	n/a	n/a	n/a		85.922 @ 08:43	n/a	n/a	No reading
5/23/95	n/a	n/a	n/a		117.410 @ 08:00	n/a	n/a	No reading
5/24/95	n/a	n/a	n/a		n/a	n/a	n/a	No reading
5/25/95	8:15	185.01	184.978	0.0%	188.914 @ 11:05	high	Greene	
5/26/95	9:00	218.37	218.090	0.1%	217.778 @ 08:00	high	Greene	
5/27/95	7:15	250.02	249.922	0.0%	n/a	high	Nickerson	
5/28/95	8:00	61.67	62.306	1.0%	n/a	no	Nickerson	
5/29/95	8:00	95.03	95.106	0.1%	103.634 @ 14:09	no	Nickerson	
5/30/95	8:00	128.35	127.906	0.3%	127.906 @ 7:58	no	Nickerson	
5/31/95	n/a	n/a	n/a		164.642 @ 10:37	n/a	n/a	No reading
Average Absolute % Difference				0.3%				

RMOTC TANK LEVEL GAUGING SYSTEM PROJECT DATA SHEET

63-STX-29	TIME	MANUAL	SITE	ABSOLUTE	COMPUTER	ALARM	PUMPER / TESTER	COMMENTS
300 BBL		GAUGE	READOUT	PERCENT	READOUT			High alarm set > = 160 bbl
TANK		(BBL)	(BBL)	DIFFERENCE	(BBL)			Low alarm set < = 60 bbl
6/1/95	8:50	195.03	194.818	0.1%	n/a	high	Greene	
6/2/95	7:50	266.68	266.306	0.1%	n/a	high	Greene	
6/3/95	8:00	56.70	56.402		n/a	low	Nickerson	Electric pwr out: reset PU
6/4/95	8:00	98.37	98.326	0.0%	n/a	no	Nickerson	
6/5/95	8:00	131.69	131.842	0.1%	n/a	no	Nickerson	
6/6/95	8:00	165.01	164.642	0.2%	n/a	high	Nickerson	
6/7/95	n/a	n/a	n/a		n/a	n/a	n/a	No reading
6/8/95	8:50	230.02	230.242	0.1%	228.930 @08:00	high	Greene	
6/9/95	9:10	261.67	261.730	0.0%	86.578 @ 16:14	high	Greene	
6/10/95	8:00	108.35	108.226	0.1%	112.162 @ 11:20	no	Nickerson	
6/11/95	8:00	140.00	139.714	0.2%	n/a	no	Nickerson	
6/12/95	8:00	171.69	171.858	0.1%	171.858 @ 08:01	high	Nickerson	
6/13/95	8:00	204.18	204.002	0.1%	n/a	high	Nickerson	
6/14/95	n/a	n/a	n/a		n/a	n/a	n/a	No reading
6/15/95	n/a	n/a	n/a		n/a	n/a	n/a	No reading
6/16/95	n/a	n/a	n/a		n/a	n/a	n/a	No reading
6/17/95	8:00	85.01	83.954	1.2%	n/a	no	Nickerson	
6/18/95	8:00	115.03	114.786	0.2%	n/a	no	Nickerson	
6/19/95	8:00	146.68	146.274	0.3%	n/a	no	Nickerson	
6/20/95	8:00	178.37	177.106	0.7%	n/a	high	Nickerson	
6/21/95	n/a	n/a	n/a		n/a	n/a	n/a	No reading
6/22/95	n/a	n/a	n/a		n/a	n/a	n/a	No reading
6/23/95	n/a	n/a	n/a		n/a	n/a	n/a	No reading
6/24/95	8:00	88.35	88.546	0.2%	n/a	no	Nickerson	
6/25/95	8:00	120.00	120.034	0.0%	n/a	no	Nickerson	
6/26/95	8:00	152.53	151.522	0.7%	n/a	no	Nickerson	
6/27/95	8:00	183.34	183.010	0.2%	n/a	high	Nickerson	
6/28/95	8:11	213.36	213.186	0.1%	n/a	high	Greene	
6/29/95	9:05	245.01	244.674	0.1%	n/a	high	Greene	
6/30/95	8:30	53.36	53.122	0.4%	n/a	low	Greene	
Average Absolute % Difference				0.2%				

RMOTC TANK LEVEL GAUGING SYSTEM PROJECT DATA SHEET

63-STX-29	TIME	MANUAL	SITE	ABSOLUTE	COMPUTER	ALARM	PUMPER / TESTER	COMMENTS
300 BBL		GAUGE	READOUT	PERCENT	READOUT			High alarm set > = 160 bbl
TANK		(BBL)	(BBL)	DIFFERENCE	(BBL)			Low alarm set < = 60 bbl
7/1/95	8:00	82.51	82.642	0.2%	n/a	no	Nickerson	
7/2/95	8:00	112.53	112.818	0.3%	n/a	no	Nickerson	
7/3/95	8:00	143.34	143.650	0.2%	n/a	no	Nickerson	
7/4/95	8:00	174.20	174.482	0.2%	n/a	no	Nickerson	
7/5/95	8:38	205.01	205.314	0.1%	n/a	high	Greene	
7/6/95	8:30	235.03	235.490	0.2%	n/a	high	Greene	
7/7/95	9:00	266.68	265.667	0.4%	n/a	high	Greene	
7/8/95	8:00	55.03	55.746	1.3%	n/a	no	Nickerson	
7/9/95	8:00	85.85	85.922	0.1%	n/a	no	Nickerson	
7/10/95	n/a	n/a	n/a		n/a	n/a	n/a	No reading
7/11/95	13:30	148.35	148.350		153.598 @ 15:40	no	Nickerson	Calibrate 13:30 (Taylor)
7/12/95	8:15	175.03	173.934	0.6%	171.966 @ 07:12	high	Greene	
7/13/95	8:37	203.34	203.454	0.1%	202.142 @ 08:00	high	Greene	
7/14/95	8:31	50.02	49.950	0.1%	49.950 @ 08:06	low	Greene	
7/15/95	8:31	78.37	78.580	0.3%	n/a	no	Nickerson	
7/16/95	8:00	106.68	106.366	0.3%	n/a	no	Nickerson	
7/17/95	8:00	135.03	134.574	0.3%	135.230 @ 08:39	no	Nickerson	
7/18/95	8:00	163.34	163.438	0.1%	163.438 @ 08:00	high	Nickerson	
7/19/95	8:35	193.36	192.302	0.5%	n/a	high	Greene	
7/20/95	8:35	53.36	52.574	1.5%	n/a	low	Greene	
7/21/95	8:15	80.00	80.126	0.2%	80.126 @ 08:00	no	Greene	
7/22/95	8:00	110.02	107.678	2.1%	n/a	no	Nickerson	
7/23/95	8:00	135.03	135.230	0.1%	n/a	no	Nickerson	
7/24/95	8:00	163.34	163.438	0.1%	163.438 @ 08:01	high	Nickerson	
7/25/95	8:00	191.69	190.990	0.4%	190.990 @ 08:01	high	Nickerson	
7/26/95	n/a	n/a	n/a		n/a	n/a	n/a	No reading
7/27/95	8:00	85.01	85.374	0.4%	85.374 @ 08:00	no	Bieber	
7/28/95	n/a	n/a	n/a		112.926 @ 08:00	no	n/a	No reading
7/29/95	7:10	138.37	139.160	0.6%	n/a	no	Bieber	
7/30/95	8:00	166.68	166.718	0.0%	n/a	high	Nickerson	
7/31/95	8:00	96.70	96.526	0.2%	96.526 @ 08:00	no	Nickerson	
Average Absolute % Difference				0.4%				

RMOTC TANK LEVEL GAUGING SYSTEM PROJECT DATA SHEET

63-STX-29	TIME	MANUAL	SITE	ABSOLUTE	COMPUTER	ALARM	PUMPER / TESTER	COMMENTS
300 BBL		GAUGE	READOUT	PERCENT	READOUT			High alarm set > = 160 bbl
TANK		(BBL)	(BBL)	DIFFERENCE	(BBL)			Low alarm set < = 60 bbl
8/1/95	8:00	124.18	122.766	1.1%	122.766 @ 08:02	no	Nickerson	
8/2/95	9:20	150.02	150.974	0.6%	149.006 @ 08:00	no	Bieber	
8/3/95	8:16	176.70	175.902	0.5%	175.246 @ 08:00	high	Bieber	
8/4/95	8:36	108.35	108.990	0.6%	108.334 @ 08:03	no	Greene	
8/5/95	8:25	135.03	134.574	0.3%	n/a	no	Greene	
8/6/95	8:00	160.00	160.158	0.1%	n/a	high	Nickerson	
8/7/95	n/a	n/a	n/a		n/a	n/a	n/a	No reading
8/8/95	8:00	212.11	211.982	0.1%	211.982 @ 08:01	high	Meidinger	
8/9/95	8:04	73.36	73.566	0.3%	73.566 @ 08:00	no	Greene	
8/10/95	8:20	100.00	99.806	0.2%	n/a	no	Greene	
8/11/95	8:03	125.01	124.734	0.2%	n/a	no	Greene	
8/12/95	8:00	150.02	150.318	0.2%	n/a	no	Nickerson	
8/13/95	8:00	175.03	174.246	0.4%	n/a	high	Nickerson	
8/14/95	8:00	200.00	200.174	0.1%	200.174 @ 08:00	high	Nickerson	
8/15/95	8:00	225.01	225.102	0.0%	225.102 @ 08:00	high	Nickerson	
8/16/95	8:03	85.01	85.374	0.4%	85.374 @ 08:00	no	Greene	
8/17/95	7:52	110.02	109.646	0.3%	110.302 @ 08:00	no	Greene	
8/18/95	8:25	135.03	134.574	0.3%	134.574 @ 08:00	no	Greene	
8/19/95	8:12	158.37	158.846	0.3%	n/a	no	Nickerson	
8/20/95	7:58	182.51	183.118	0.3%	n/a	high	Nickerson	
8/21/95	7:50	49.61	49.950	0.7%	n/a	low	Nickerson	
8/22/95	8:02	74.20	74.222	0.0%	74.222 @ 08:00	no	Nickerson	
8/23/95	8:37	98.37	99.150	0.8%	n/a	no	Greene	
8/24/95	8:06	121.67	122.766	0.9%	122.766 @ 08:00	no	Greene	
8/25/95	8:33	146.68	147.038	0.2%	n/a	no	Greene	
8/26/95	8:01	170.02	169.998	0.0%	n/a	high	Nickerson	
8/27/95	8:03	195.03	194.926	0.1%	196.894 @ 10:19	high	Nickerson	
8/28/95	7:20	216.70	217.230	0.2%	217.230 @ 08:00	high	Nickerson	
8/29/95	8:02	56.70	56.510	0.3%	56.510 @ 08:01	low	Nickerson	
8/30/95	n/a	n/a	n/a		n/a	n/a	n/a	No reading
8/31/95	7:48	103.34	103.086	0.2%	103.742 @ 08:52	no	Greene	
Average Absolute % Difference				0.3%				